Carlin®
Combustion Technology

Installation and Operating Instructions

For

Carlin Flame Funnel® Oil Burners

Models 1050FFD and 1150FFD

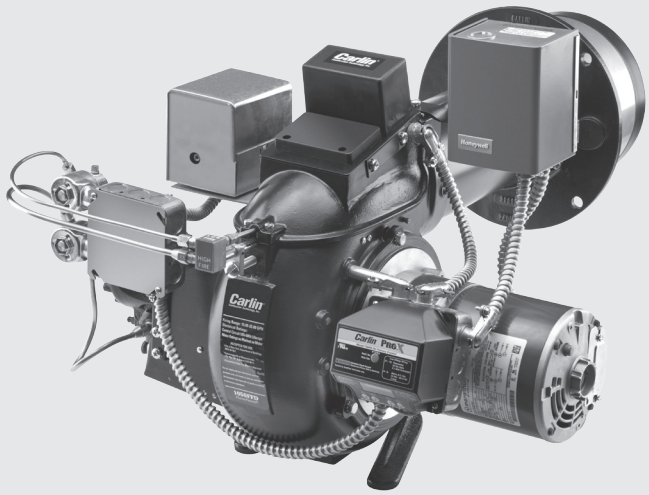

IT IS IMPORTANT THAT THE INSTALLATION OF THE OIL BURNER, PIPING AND FITTINGS, SAFETY DEVICES, CONTROLS, ELECTRICAL WIRING AND EQUIPMENT BE DONE IN ACCORDANCE WITH NATIONAL AND/OR LOCAL REGULATIONS OF THE AUTHORITIES HAVING JURISDICTION OVER SUCH INSTALLATION.

SPECIFICATIONS

ITEM	MODEL NUMBER 1050FFD	MODEL NUMBER 1150FFD
Fuel Specification	No. 2 ASTM D396	No. 2 ASTM D396
Firing Range High-Fire* Low-Fire	 15.00-25.00* 9.00-12.00	 20.00-35.00* 12.00-15.00
Motor HP, RPM, Hz	1, 3450, 60	1 1/2, 3450, 60
Motor Volts, 1-phase 3-phase	115/208-230** 208-230/460**	115/208-230** 208-230/460**
Motor Amps; 115 volts, 1-phase 230 volts, 1-phase 230 volts, 3 phase 460 volts, 3 phase	16.4 8.2 4.0 2.0	22.0 11.0 5.0 2.5
Control Volts, Hz	120, 60	120, 60
Ignitor Volts	120	120
Burner Housing	Rugged casting	Rugged casting
Blower Wheel, Dia. x W.	7" x 5"	7 5/8" x 5"
Flame Retention Ring, O.D.	3 13/16"	4 1/4"
2-Stage Fuel Unit Pressure	100	100
Low and High-Fire Oil Valve	120V, 60-Hz	120V, 60-Hz
Damper Actuator	120V, 60-Hz	120V, 60-Hz
Oil Nozzle Specs.	(3) 45°SS	(3) 45°SS
Approximate Shipping Weight	135 lbs.	145 lbs.

*Gph ratings are based on sea level to 2,000 ft. elevation. For every 1,000 ft. rise over 2,000 ft., reduce the maximum gph rating by 4%.

**Motor volts and phase must be specified when ordering.

Carlin Combustion Technology
126 Bailey Rd North Haven, CT 06473
Ph 203-680-9401 Fx 203-680-9403

Tech Support 800-989-2275 carlincombustion.com

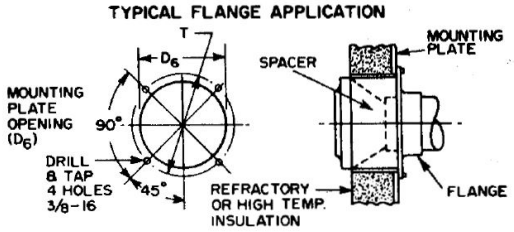

DIMENSIONS – MODELS 1050FFD & 1150FFD

MODEL NO.	A	B	C	D_1	D_2	D_3	D_6	T	L
1050 FFD	1 3/8	4–8	11 1/2–7 1/2	5 1/4	8 5/8	11	9	10	31 1/4
1150 FFD	2 1/8	4–8	11 7/8–7 7/8	6 1/4	9 7/8	12	10 1/4	11	32

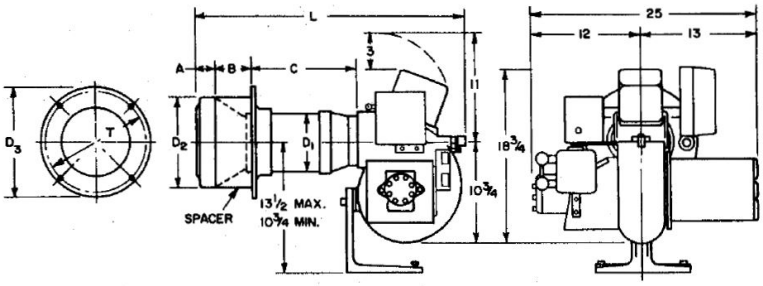

Description

Model 1050FFD and Model 1150FFD Flame-Funnel oil burners for use with No. 2 fuel oil are low-high-low (step modulating) high speed flame retention burners. Oil flow rate is step-modulated by the use of two oil valves and three nozzles, low-fire from the first nozzle and high-fire added by the second and third nozzles firing simultaneously. Combustion air is controlled by a damper actuator. Its transition cam (orange) energizes the second-stage valve as the air shutter opens.

Due to the low-high-low feature of these burners they are very versatile and efficient.

1. They can operate in forced draft boilers or furnaces at pressures up to 0.50 inches W.C.
2. They will save typically, 20% in seasonal fuel consumption compared to conventional single-stage flame retention burners.
3. They can operate with or without refractory lined combustion chambers.
4. They are superior for process applications.
5. They can be installed through fire door openings.

Low-High-Low (step-modulation) firing

Operation: A true low-high-low burner controls both air and oil flow rates. A low-fire start burner (low-high-off) controls only the oil rate and has a fixed air setting with none of the preceding advantages. The low-high-low burner cycle operates as follows:

1. Call for heat. Burner motor and ignition are energized. Air is in the low-fire position. The low-fire oil valve admits oil to the low-fire nozzle and its spray ignites, burning clean with proper air/fuel ratio.
2. If demand exceeds low-fire, the damper actuator is energized through a high-fire operating control (aquastat, airstat, pressuretrol, or outdoor thermostat). As the damper actuator approaches a wide open position, the orange transition cam energizes the high-fire valve and the full fire with open air, burns clean with high $C0_2$ and high efficiency. Expect a 15-second delay before transitioning to high-fire.
3. As the high-fire input begins to exceed the demand of the high-fire operator, the operator opens to de-energize the damper actuator. As the damper actuator returns the air shutter to low-fire it will de-energize the high-fire valve.
4. If the demand exceeds low-fire, the high-fire operating control would again call for more heat as in Step 2 and then followed by Step 3.
5. If, after returning to low-fire, the load should drop to below the low-fire output, the operating limit would shut off the burner completely.

Both models are completely pre-wired and fire-tested at the factory. Ultraviolet or infrared scanners are assembled to the factory-located nipple on the burner-mounting flange.

WARNING A control with a **minimum 10-Second Pre-Purge MUST** be used with this Damper Motor to ensure the High-Fire Damper is closed at the end of the call for heat/at the start of your next call for heat.

Assemble Pedestal (when used)

1. Carefully tip burner back on housing to expose pedestal mounting hole.
2. Fasten pedestal to mounting block. The pedestal height is adjustable from 10¾" minimum to 13½" maximum to centerline of air tube.
3. Tighten at desired height.

Installing the Burner

Before installing, check the following items:

1. The combustion space can be larger, but not smaller than indicated by the dimensions in Table 3, page 4. An exception is as follows: When a refractory chamber is used, the length can be reduced by 10 percent, only if necessary.
2. The mounting plate opening and tappings must be according to the dimensions shown at the top of the previous page. (See Typical Flange Application.)
3. The diameter of the opening in the refractory or front insulating block should equal the diameter of the opening in the mounting plate.
4. Dimension "B", the length of the stainless steel spacer, should be approximately equal to the distance from the outside of the front plate to the inside of the insulation or refractory. See Fig. 1. When the above requirements are met, proceed as follows:
   a. Insert end of burner into opening and fasten flange to mounting plate using four 3/8-16 x 3/4 cap screws provided.
   b. The burner mounting flange is designed to support the burner by itself. The pedestal is furnished for ease of installation and service where the burner is close to the floor, also for additional support when the mounting plate is not sufficiently strong. For the latter purpose, blocks or bricks may be used, or a steel shelf or the like may be fabricated and fastened to the boiler front or to the floor to support the pedestal.
   c. Make sure burner is approximately level or, if deliberately pitched down for a low crown sheet, that the angle is correct.

FIGURE 1

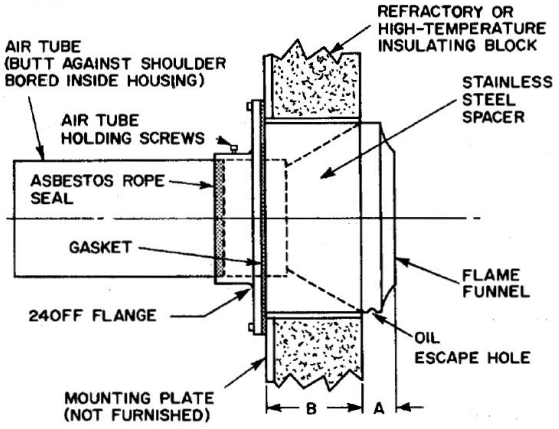

Oil Supply Piping

GENERAL: In systems where the bottom of the tank is higher than, or about equal to, the level of the fuel unit, a one-pipe system may be used. In systems requiring lift, a two-pipe installation is required. It is essential that all air leaks be eliminated before starting the burner. Overhead systems should be avoided. In no case should the top of the tank be more than 12 feet above the fuel unit. Flexible copper tubing with flared end-fittings is strongly recommended.

If a system is being converted from heavy oil, the oil storage tank must be clean. Install properly sized copper oil lines all the way to the tank if possible. If not, replace as much of the old piping as possible with copper lines. Also replace old filters and fire-protective valves with new ones properly sized.

VALVES AND FILTERS: Domestic-type fire-protective valves, check valves, and oil filters are too small and too restrictive for the 40 gph pumping rate of the fuel unit. Use fittings which are equal or greater in size than the oil line on both suction and return.

OIL LINE SIZES: Table 1 shows the OD of the copper tubing recommended, depending upon the lift and the length of run.

TABLE 1 — OIL LINE SIZING GUIDE (Copper Tubing)

LIFT, FEET	MAXIMUM LENGTH OF RUN, FEET (Both Suction and Return) ½ OD	⅝ OD
0	81	100
2	73	100
4	64	100
6	56	100
8	48	100
10	40	100
12	32	90
14	24	67
15	20	56

NOTES

1. If lift exceeds 15 feet or if the length of run exceeds the above, use a booster pump and system.
2. Sizes shown apply to both suction and return line for a two-pipe system for one burner only.
3. For a multiple burner installation, use a separate suction line for each burner. If a common return is used, it must be increased by one size for each additional burner.
4. For one-pipe (gravity or no-lift) installations, use 1/2-inch OD tubing for runs up to 94 feet long, and 5/8-inch OD for runs of 95 to 150 feet long.

FIGURE 2

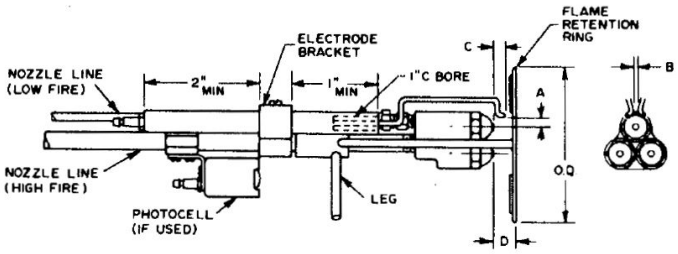

TABLE 2 — ELECTRODE AND FLAME RETENTION RING SETTINGS (Inches)

MODEL	A Bottom of electrode wires to center of top nozzle	B Spark gap	C Electrode tips to face of nozzles	D Face of nozzles to outside rim of retention ring	O.D.
1050FFD	5/16-3/8	1/8	1/4	5/8	3 13/16
1150FFD	5/16-3/8	1/8	1/4	5/8	4 1/4

FIGURE 3

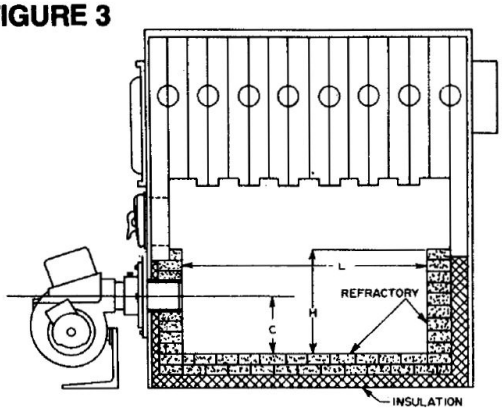

Brick combustion chamber, side view.

FIGURE 4

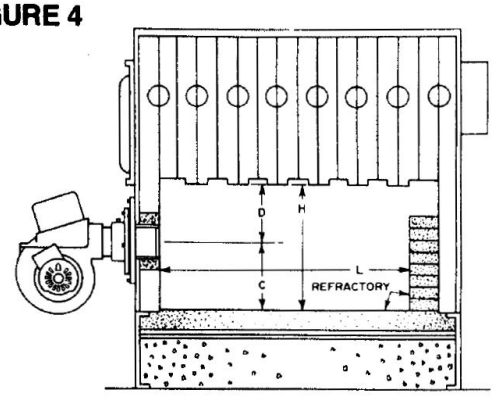

Wet leg boiler. No combustion chamber, side view.

FIGURE 5

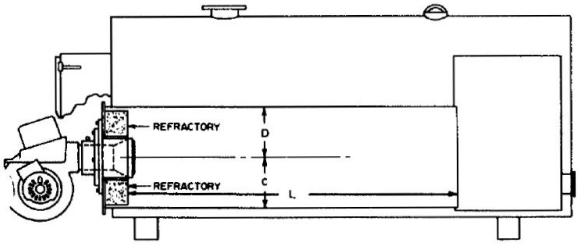

Scotch Marine boiler. No combustion chamber.

FIGURE 6

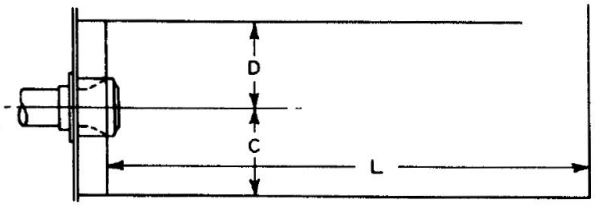

An increase in dimension "D" over those listed in Table 3 is preferred for better heat distribution. (Does not apply to Scotch Marine boiler, Fig. 5.)

TABLE 3 — MINIMUM INSIDE DIMENSIONS FOR COMBUSTION SPACE

FIRING RATE (3 Nozzles Firing) GPH	C	D	L*	Width or Diam.
15.00	10	10	44	20
16.00	10.5	10.5	46	21
17.00	10.5	10.5	48	21
18.00	11	11	50	22
19.00	11	11	52	22
20.00	11	11	54	22
21.00	11	11	56	22
22.00	11.5	11.5	57	23
23.00	11.5	11.5	59	23
24.00	11.5	11.5	60	23
25.00	11.5	11.5	62	23
26.00	12	12	63	24
27.00	12	12	65	24
28.00	12	12	66	24
29.00	12	12	68	24
30.00	12.5	12.5	69	25
31.00	12.5	12.5	71	25
32.00	12.5	12.5	73	25
33.00	12.5	12.5	74	25
34.00	13	13	76	26
35.00	13	13	77	26

* If refractory chamber or target wall is used, these lengths may be reduced by 10 percent if necessary.

Note: Refractory chambers with abnormally high walls are not recommended. As a general guide, the height of the walls should not exceed the inside width of the chamber. Side walls of refractory combustion chamber need only be high enough to protect the base and about 3 inches of the mud leg of the boiler.

Electrical Wiring

1. Bring the 110-120V power supply to the control circuit through a fused disconnect switch as shown in the diagram shipped with the burner.
2. Wire the burner motor power supply through a fused disconnect switch. Refer to the diagram shipped with the burner. For single-phase motors, wire the power supply to the L1 and L2 terminals of the motor contactor. For three-phase motors, wire the power supply to the L1, L2 and L3 terminals of the motor contactor.
3. Refer to the specification table on page 1 for motor current ratings.

Be sure that the supply voltage corresponds to the voltage as labeled on the top of the motor contactor, because the motor winding connections are installed at the factory for that voltage.

Light-Off and Adjustment

1. The following equipment is needed to make the necessary tests for a proper adjustment and safety check:
   a. Smoke tester.
   b. Combustion analyzer or $C0_2$ tester (0-20%).
   c. Draft gauge.
   d. Stack thermometer.
   e. Microammeter.
   f. Voltmeter and ammeter.
   g. Oil pressure gauge (0-200 PSI).
   h. Oil vacuum gauge (0-30 inches Hg).
2. Check the following before light-off is attempted:
   a. Boiler water level (or pressure for water boiler).
   b. Feed water valves and oil valves open.
   c. Primary control relays are free and safety switch is not locked out on safety.
   d. Limits and operating controls are set properly. Note: The operating limit No. 1 should be set a little higher than No. 2. The high limit should be set higher than both Nos. 1 and 2.
   e. Turn the burner service switch "off".
   f. Turn the low-fire switch "off" (down). This will prevent high-fire operation during low-fire adjustment.
   g. Close the main disconnect switches (both the control circuit and motor circuit).
   h. Check the motor rotation. Turn the service switch on and off briefly. The top of the fan should rotate toward the air tube. If it does not, interchange connections at Tl and T2 of the motor contactor.
   i. Open the bleed port on the fuel unit and run the motor to purge the air from the oil system. When the oil flows clear, close the bleed port. The burner should now be ready to start.

NOTE: WHEN STARTING THIS BURNER THE FIRST TIME OR AFTER CHANGING NOZZLES THE FLAME MAY GO OUT DURING THE SWING FROM LOW TO HIGH. BE READY TO SHUT THE BURNER DOWN JUST AFTER THE FLAME GOES OUT. REPEAT THIS UNTIL THE AIR IS PURGED OUT OF THE HIGH-FIRE OIL LINE.

3. The linkage assembly is set at the factory for maximum high-fire air. The connecting rod between the damper actuator arm and the high-fire air shutter should not be adjusted.

NOTE: Damper actuator is set at the factory. If adjustment is needed, please reference the included supplement (Part # MNSQN71) for all settings and operation.

NOTE: Be sure you are using a primary control with a **minimum 10-second pre-purge** to ensure air damper closes after a call-for heat (see warning on page 2).

4. Set the head assembly and low-fire air shutter according to Tables 4 or 5 on page 6. Start the burner with the low-fire switch OFF (switch down).
5. Switch to high-fire by turning the low-fire switch to "on" (up). If the high-fire lacks air, adjust the combustion head until the fire burns clean and sharp. Turning the combustion head adjusting screw clockwise will give more air, counterclockwise, less air. **DO NOT ALTER THE LOW-FIRE (TOP) SHUTTER FOR THE HIGHFIRE COMBUSTION AIR.**
6. When the high-fire looks clear and sharp, turn the burner to low-fire and readjust the air if necessary. Switch from low to high and back several times. Adjust until both fires look good and clean.
7. Check draft, smoke number, $C0_2$ and stack temperature. Typical readings are as follows for natural draft:

Fire	Draft	Smoke	$C0_2$
Low-fire	(higher)	Trace	11-13%
High-fire	.03/.05 W.C.	Zero	12-14%

   Adjust burner as required to obtain these readings.
8. Stop the burner with the service switch. Wait for the postpurge, then turn it on again. After a prepurge period the burner should light-off smoothly; then go to highfire.
9. Check the flame signal on both low and high-fire. The Honeywell RM7840L control should read at least 1.25 VDC – see control manufacturer literature.
10. Check the flame failure response and safety lockout by shutting off the fuel supply (or de-energizing the oil valves) while the burner is running.
11. Check the low water cut-off (if used) by depressing float switch or by draining water to reduce the level.

TABLE 4 — NOZZLE GUIDE AND AIR SETTINGS FOR MODEL 1050FFD

Firing Rate, GPH	Nozzles			Head Setting	Low Fire Air Shutter Opening
	Low Fire	High Fire			
	1*	2	3		
15.00	9.00	3.00	3.00	1/16	1
16.00	9.00	3.50	3.50	3/16	7/8
17.00	9.00	4.00	4.00	5/16	3/4
18.00	9.00	4.50	4.50	7/16	11/16
19.00	9.00	5.00	5.00	9/16	5/8
20.00	9.00	5.50	5.50	11/16	9/16
21.00	9.00	6.00	6.00	13/16	1/2
22.00	9.00	6.50	6.50	1	7/16
23.00	9.00	7.00	7.00	1 1/4	3/8
24.00	9.00	7.50	7.50	1 1/4	3/8
25.00	9.00	8.00	8.00	1 1/4	3/8

USE 45° SS NOZZLES

* **Note**: Nozzle No. 1 may be increased to 10.00, 11.00, or 12.00 gph. If this is done, Nozzles No. 2 and 3 must be decreased so that the same total firing rate is maintained.

DO NOT DECREASE Nozzle No. 1 below 9.00 gph.

TABLE 5 — NOZZLE GUIDE AND AIR SETTINGS FOR MODEL 1150FFD

Firing Rate, GPH	Nozzles			Head Setting	Low Fire Air Shutter Opening
	Low Fire	High Fire			
	1**	2	3		
20.00	12.00	4.00	4.00	0	5/8
21.00	12.00	4.50	4.50	0	5/8
22.00	12.00	5.00	5.00	0	5/8
23.00	12.00	5.50	5.50	0	5/8
24.00	12.00	6.00	6.00	0	5/8
25.00	12.00	6.50	6.50	0	5/8
26.00	12.00	7.00	7.00	1/8	5/8
27.00	12.00	7.50	7.50	1/4	5/8
28.00	12.00	8.00	8.00	7/16	9/16
29.00	12.00	8.50	8.50	9/16	1/2
30.00	12.00	9.00	9.00	11/16	7/16
31.00	12.00	10.00	9.00	13/16	3/8
32.00	12.00	10.00	10.00	1	5/16
33.00	12.00	11.00	10.00	1 1/4	1/8
34.00	12.00	11.00	11.00	1 1/4	1/8
35.00	12.00	12.00	11.00	1 1/4	1/8

USE 45° SS NOZZLES

** **Note**: Nozzle No. 1 may be increased to 13.00, 14.00, or 15.00 gph. If this is done, Nozzles No. 2 and 3 must be decreased so that the same total firing rate is maintained.

DO NOT DECREASE Nozzle No. 1 below 12.00 gph.

FIGURE 7

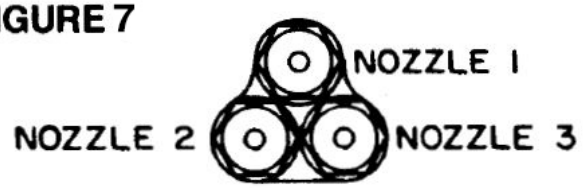

Wiring For Low-High-Low Step-Modulation

In order to take full advantage of the energy savings potential of these burners they should be wired to operate with low-high-low cycles. Hence, the firing cycle would be much longer by going from low to high to low once or several times before shutting off.

In the following illustrations are two examples: 1. Water Boiler. 2. Steam Boiler. In each case we have a limit circuit which starts and stops the burner and a high-fire control which brings the high-fire on and off.

Also, pre-wired and built into the burner is a manual highfire switch which enables the installer or operator to hold the burner on low-fire if so desired.

Refer to the appropriate example for your installation.

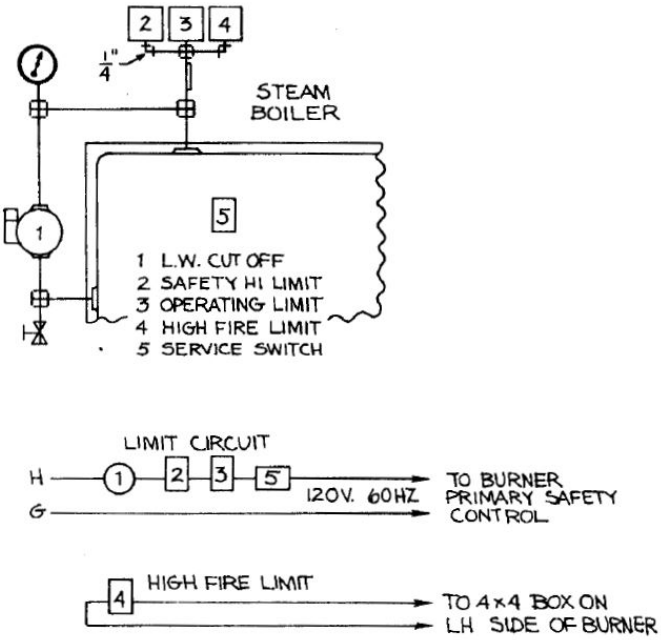

Example: Steam Boiler Operating Range 3 to 6 PSI

2. Set Safety Hi Limit: Cut in 8 PSI-Cut out 10 PSI
3. Set Operating Limit: Cut in 5 PSI-Cut out 6 PSI
4. Set Hi-Fire Control: Cut in 3 PSI-Cut out 4 PSI

Operation:

1. Call for heat; cold start. Burner starts on low and goes to high-fire.
2. When pressure rises to 4 PSI the burner goes to low-fire.
3. If pressure drops to 3 PSI burner returns to high-fire.
4. If pressure rises to 6 PSI burner shuts off.

NOTE: Since the calibrations on the limit controls are seldom exact, it will be necessary to readjust the settings during operation.

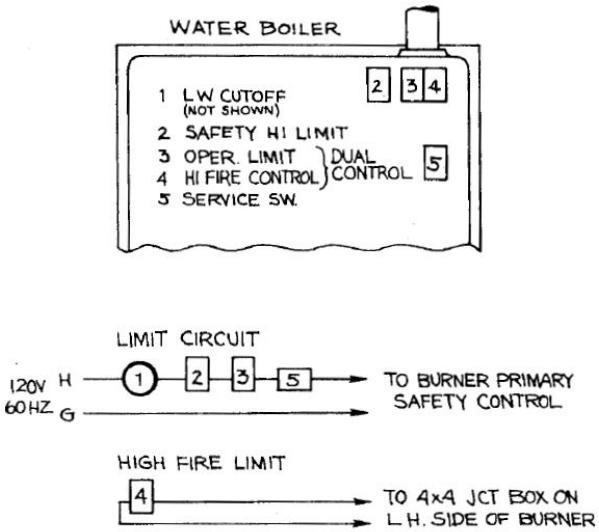

Example: Water Boiler Operating Range 170°-190°F

2. Set Safety Hi Limit: Cut in 200° – Cut out 210°
3. Set Operating Limit: Cut in 180° – Cut out 190°
4. Set Hi-Fire Control: Cut in 170° – Cut out 180°

Operation:

1. Call for heat; cold start. Burner starts on low and goes to high-fire.
2. When the temperature rises to 180°F the burner goes to low-fire.
3. If temperature drops to 170°F burner returns to high-fire.
4. If temperature rises to 190°F burner shuts off.

NOTE: Since the calibrations on the limit controls are seldom exact, it will be necessary to readjust the settings during operation.

Ventilation

Boiler room areas of commercial buildings of normal construction generally do not allow for sufficient air infiltration. Provision must be made for an outside air supply to the boiler room area. This is required because combustion of oil consumes about 30 cfm of air per 1 gph input. To ensure an adequate air supply, provision must be made for 30 cfm per 1 gph plus 50% additional for draft regulator.

Example:

Burner is firing at 6.00 gph. 6 x 30 = 180 cfm. Add 50% = 270 cfm. Install an opening of approximately 30 sq. in. free area per 1 gallon per hour input. When louvers are used. consider the free area half of the total.

Example:

Firing 6.00 gph free area 6 x 30 = 180 sq. in. A louvered opening would be 180 X 2 = 360 sq. in. gross. Fresh air louvers must be above ground level to prevent obstruction by leaves and snow.

TECH SUPPORT HOTLINE 800-989-2275

Carlin Combustion Technology

Carlin Combustion Technology

126 Bailey Road North Haven, CT 06473 Phone 203–680–9401 Fax 203–764–1714

e-mail us at: info@carlincombustion.com visit our website: www.carlincombustion.com

32961 022020