Wiring

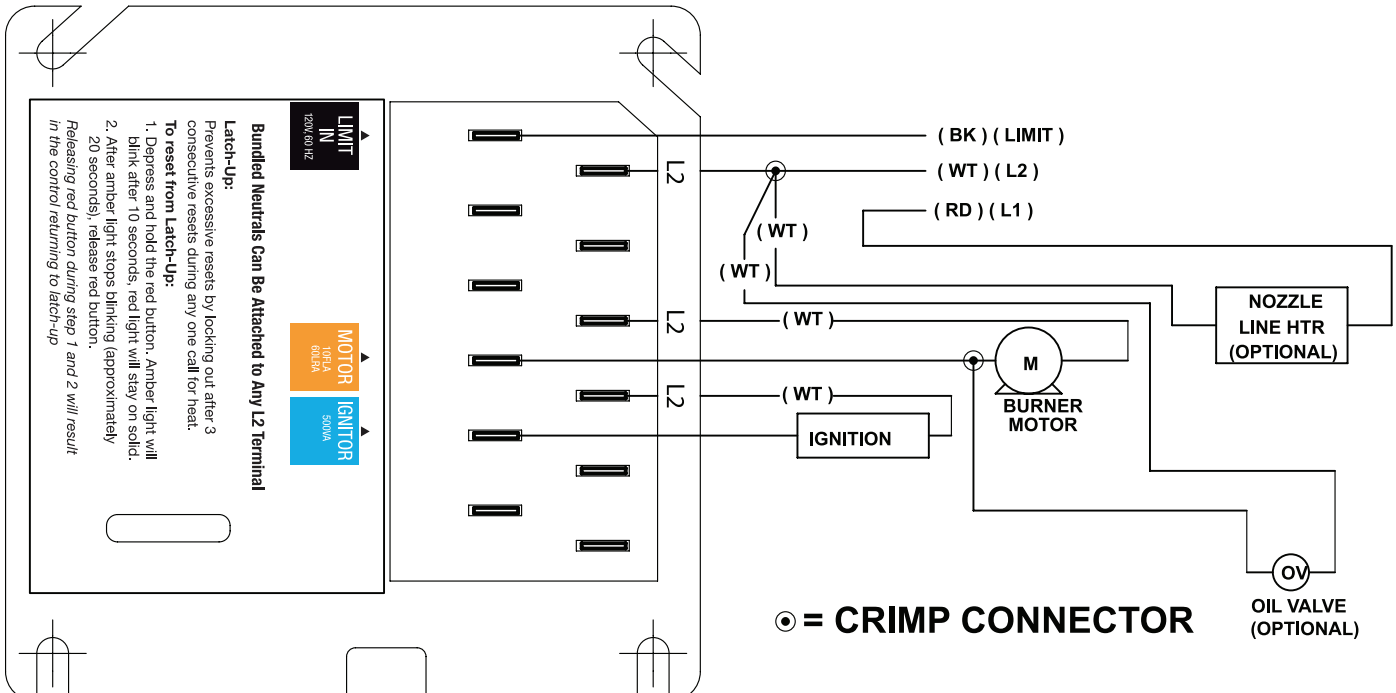
LIMIT IN
120V, 60 HZ
MOTOR
1.0A
IGNITOR
500VA
Bundled Neutrals Can Be Attached to Any L2 Terminal
Latch-Up:
Prevents excessive resets by locking out after 3 consecutive resets during any one call for heat.
To reset from Latch-Up:
1. Depress and hold the red button. Amber light will blink after 10 seconds, red light will stay on solid.
2. After amber light stops blinking (approximately 20 seconds), release red button.
Releasing red button during step 1 and 2 will result in the control returning to latch-up
L2
L2
L2
(BK) (LIMIT)
(WT) (L2)
(RD) (L1)
(WT)
(WT)
(WT)
(WT)
NOZZLE LINE HTR (OPTIONAL)
M
BURNER MOTOR
IGNITION
OV
OIL VALVE (OPTIONAL)
= CRIMP CONNECTOR